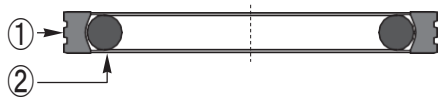

TG4

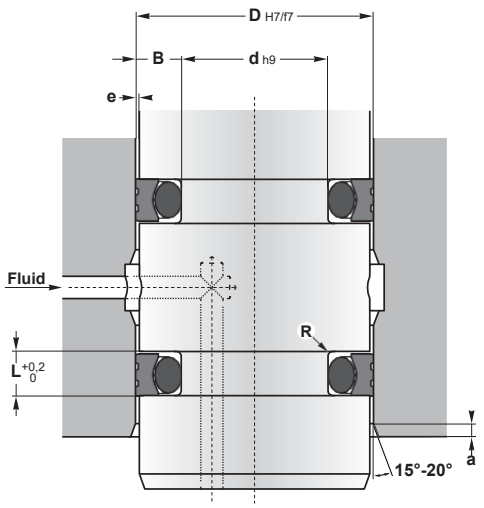

The Turcon Roto Glyd Ring **TG4** is double-acting and can be exposed to pressure from one, or from both sides. It consists of a seal ring of Turcon material and is activated by an O-ring as an elastic energising element. The contact surface pressure of the seal ring is specially designed for use under high pressures and at low sliding speeds. Depending on the profile cross-section of the seal, the contact surface has one or two continous machined grooves.

These have the following functions:

- Improved seal efficiency by increasing the specific surface load pressure against the sealed surface
- Formation of **lubricant reservoir** and reduction in friction.
- In order to improve the pressure activation of the O-ring, the Roto Glyd Ring has **notched end faces** as standard. The rear face which holds the O-ring has a concave form. This increases the contact surface and shall prevent the seal from turning with the rotating surface.

Operating conditions

Pressure	≤ 30 MPa
Temperature	-30°C to 100°C
Speed	≤ 2 m/s
pv value	≤ 2,5 MPa.m/s
Fluids	Mineral oils, water emulsions

Materials

Dynamic seal ①	T10
Static seal ②	NBR 70 Sh A

Assembly

In closed housings

Advantages

Low friction
Stick-slip free starting, no sticking
High abrasion resistance and dimensional stability
Simple groove design, small groove dimensions
Lubricant reservoir

Please contact us for applications approaching maximum values.

d	D	L	Reference
20	15,1	2,2	**TG4000200-T10N**
25	20,1	2,2	**TG4000250-T10N**
40	32,5	3,2	**TG4100400-T10N**
50	42,5	3,2	**TG4100500-T10N**
63	55,5	3,2	**TG4100630-T10N**
80	69	4,2	**TG4200800-T10N**
100	89	4,2	**TG4201000-T10N**
120	109	4,2	**TG4201200-T40N**
125	114	4,2	**TG4201250-T10N**
160	144,5	6,3	**TG4301600-T10N**
200	184,5	6,3	**TG4302000-T10N**
250	234,5	6,3	**TG4302500-T10N**
300	279	8,1	**TG4403000-T10N**

Serie N°	d (mm)		L (mm)	d (mm)	R (mm)	a (mm)	e max (mm)			O-ring	Number of grooves in the sealing surface
	Standard range	Extended range					10 MPa	20 MPa	> 20 MPa		
TG40	8 → 39,9	8 → 135	2,2	**D** - 4,9	0,4	2	0,15	0,1	H8/f7	1,78	0
TG41	40 → 79,9	14 → 250	3,2	**D** - 7,5	0,6	2,5	0,2	0,15		2,62	1
TG42	80 → 132,9	22 → 460	4,2	**D** - 11	1	3,5	0,25	0,2		3,53	1
TG43	133 → 329,9	40 → 675	6,3	**D** - 15,5	1,3	5	0,3	0,25		5,34	2
TG44	330 → 669,9	133 → 690	8,1	**D** - 21	1,8	6,5	0,3	0,25		7	2
TG45	670 → 999,9	670 → 999,9	9,5	**D** - 28	2,5	7,5	0,45	0,3		8,4	2