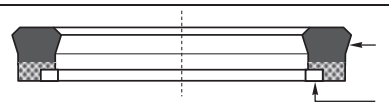

SPS

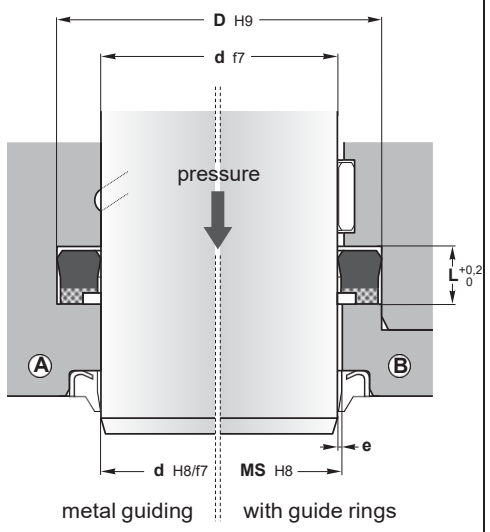

MS = d + 2e

Pressure (MPa)	e (mm)
16	≤ 0,4
25	≤ 0,2
40	≤ 0,1

SPS rod seals are made up of NBR impregnated on cotton fabric which is initially prepared and moulded with NBR material. They are especially designed for rod applications. POM back-up ring provides a high rate of extrusion resistance.

SPS rod seals with inner dimension smaller than 20 mm are recommended to be mounted in open grooves.

Operating conditions

Pressure	≤ 40 MPa
Temperature	-30°C to 110°C
Speed	≤ 0,5 m/s

Materials

Seal ①	NBR with cotton fabric
Anti-extrusion ring ②	Acetal resin (POM)

Assembly

In closed grooves Ⓐ

In open grooves Ⓑ

Advantages

Efficient sealing at low pressure

Easy to fit

Large size range

Small cross sections

Good chemical resistance

Wide temperature range

The integrated anti-extrusion ring prevents the seal material from extrusion at higher pressure

Please contact us for applications approaching maximum values.

d	D	L	ISO 5597	Reference
12	23	7,5		**SPS-090047**
16	28	7,5		**SPS-110062**
18	30	7,5		**SPS-118070**
20	27	6,5		**SPS-106078**
	28	6,4	●	**SPS-110078-1**
	28	7		**SPS-110078**
	30	8,5		**SPS-118078**
22	30	7		**SPS-118086**
	32	10		**SPS-125086**
	34	9,5		**SPS-133086**
25	33	6,4	●	**SPS-129098-1**
	35	9		**SPS-137098**
	38	10		**SPS-149098**
25,4	38,1	10		**SPS-150100**
28	36	6,4	●	**SPS-141110**
	38	8	●	**SPS-149110-1**
	40	9,5		**SPS-157110**
28,57	39,68	9,25		**SPS-156112**
30	38	6,4		**SPS-149118**
	40	7,5		**SPS-157118**
	40	10,5		**SPS-157118-1**
	45	9		**SPS-177118-1**
32	40	6,4	●	**SPS-157125-1**
	40	9		**SPS-157125**
	45	10		**SPS-177125**
34,92	50,8	8,5		**SPS-200137/4**
35	43	6,4		**SPS-169137**
	45	10,5		**SPS-177137/3**
	50	11,5		**SPS-196137**
36	44	6,4	●	**SPS-173141**
	46	8,5		**SPS-181141**
	48	9,5		**SPS-188141**
	48	12		**SPS-188141-1**
38,1	50,8	10		**SPS-200150**
	53,97	10,5		**SPS-212150-5**

d	D	L	ISO 5597	Reference
40	48	6,5		**SPS-188157**
	50	8	●	**SPS-196157-3**
	50	10,5		**SPS-196157-1**
	50	11		**SPS-196157**
	55	8		**SPS-216157**
	55	11		**SPS-216157-1**
42	52	9		**SPS-204165**
44,45	53,97	7,62		**SPS-212175-1**
	60,32	11,6		**SPS-237175**
45	55	8	●	**SPS-216177**
	55	11		**SPS-216177-1**
	57	10		**SPS-224177**
	60	10,5		**SPS-236177**
	65	14,5		**SPS-255177**
50	60	8	●	**SPS-236196**
	60	10		**SPS-236196-1**
	62	9,5		**SPS-244196-1**
	65	11		**SPS-255196**
	70	14,5		**SPS-275196**
55	65	8		**SPS-255216-1**
	65	11		**SPS-255216**
	70	10,5		**SPS-275216**
56	71	10,5		**SPS-279220**
	71	12,5	●	**SPS-279220-1**
	76	14,5		**SPS-299220**
57,15	69,85	10		**SPS-275225**
60	69,5	7		**SPS-273236**
	70	8		**SPS-275236**
	70	11		**SPS-275236-1**
	70	13		**SPS-275236-2**
	72	10		**SPS-283236**
	75	13		**SPS-295236**
	80	14,5		**SPS-314236**
63	75	11		**SPS-295248**
	78	12,5	●	**SPS-307248**
	83	14,5		**SPS-326248**

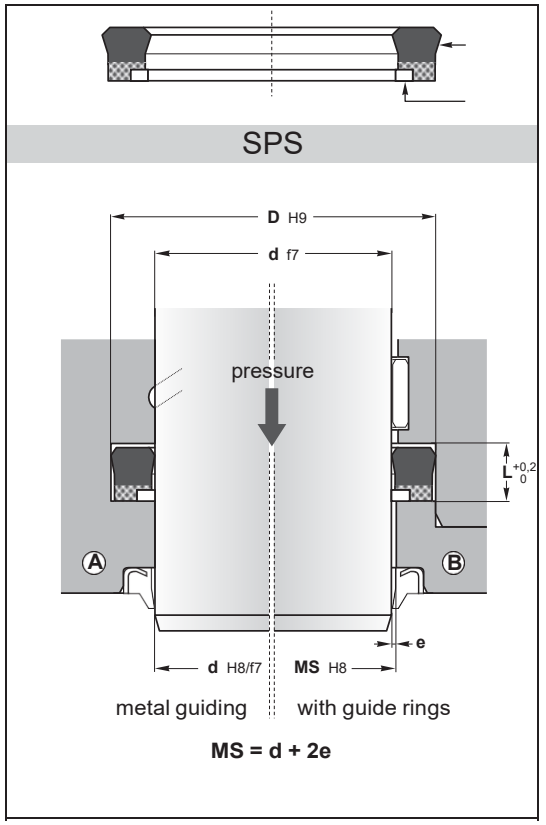

Pressure (MPa)	e (mm)
16	≤ 0,4
25	≤ 0,2
40	≤ 0,1

SPS rod seals are made up of NBR impregnated on cotton fabric which is initially prepared and moulded with NBR material. They are especially designed for rod applications. POM back-up ring provides a high rate of extrusion resistance.

SPS rod seals with inner dimension smaller than 20 mm are recommended to be mounted in open grooves.

Operating conditions

Pressure	≤ 40 MPa
Temperature	-30°C to 110°C
Speed	≤ 0,5 m/s

Materials

Seal ①	NBR with cotton fabric
Anti-extrusion ring ②	Acetal resin (POM)

Assembly

In closed grooves Ⓐ

In open grooves Ⓑ

Advantages

Efficient sealing at low pressure

Easy to fit

Large size range

Small cross sections

Good chemical resistance

Wide temperature range

The integrated anti-extrusion ring prevents the seal material from extrusion at higher pressure

Please contact us for applications approaching maximum values.

d	D	L	ISO 5597	Reference
65	75	13,5		**SPS-295255**
	77	9,6		**SPS-303255**
	80	11,5		**SPS-314255**
70	80	8		**SPS-314275-1**
	80	13		**SPS-314275**
	82	10,5		**SPS-322275**
	84	12,5		**SPS-330275**
	85	12		**SPS-334275-1**
	85	12,5	•	**SPS-334275**
75	90	11,5		**SPS-354295**
	95	14,5		**SPS-374295**
80	93	14,5		**SPS-366314**
	95	12		**SPS-374314**
	96	10,5		**SPS-377314**
	100	12		**SPS-393314-1**
	100	14,5		**SPS-393314**
85	100	12		**SPS-393334-1**
90	100	11		**SPS-393354**
	105	9,5		**SPS-413354**
	105	12,5	•	**SPS-413354-1**
	106,2	10,8		**SPS-418354**
	110	12,5		**SPS-433354**
95	107	12,5		**SPS-421374**
	110	12,5		**SPS-433374**
	112	12		**SPS-441374**
	115	14,5		**SPS-452374**
100	113	13,5		**SPS-444393**
	115	11,5		**SPS-452393-1**
	120	12		**SPS-472393-1**
	120	14,5		**SPS-472393**
105	115	11		**SPS-452413**
110	125	12		**SPS-492433**
	130	12,5		**SPS-511433**
	135	15,5		**SPS-531433**
120	132,7	10		**SPS-522472**
	135	12,5		**SPS-531472**
	140	12,5		**SPS-551472**

d	D	L	ISO 5597	Reference
125	150	14,5		**SPS-590492**
130	145	13		**SPS-570511-1**
	145	15		**SPS-570511**
	150	16		**SPS-590511**
	155	18,8		**SPS-610511**
140	155	13		**SPS-610551**
	160	12,5		**SPS-629551**
	160	14,5		**SPS-629551-1**
145	157,7	10		**SPS-620570**
150	170	14,5		**SPS-669590-1**
160	175	16		**SPS-688629**
	180	14,5		**SPS-708629**
170	182,7	10		**SPS-719669**
180	200	14,5		**SPS-787708**
190	210	14,5		**SPS-826748**
200	220	14,5		**SPS-866787**
210	230	14		**SPS-905826**
220	250	20,5		**SPS-984866**