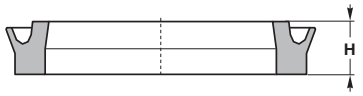

PEM

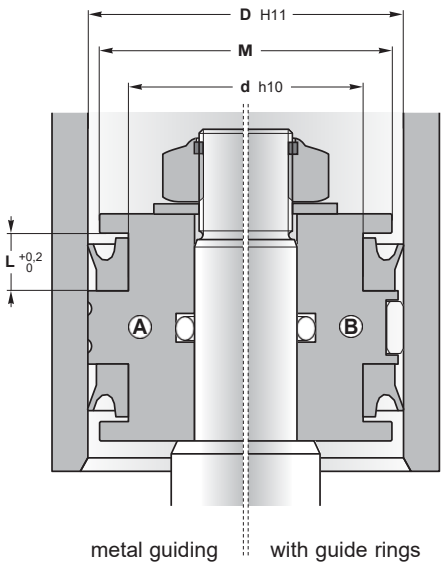

PEM has been designed for single and double acting cylinders.

The deep groove between the dynamic and the static lip, together with back-to-back radius lips, enhance seal sliding, even where there is a lack of environmental lubrication.

Operating conditions

Pressure	≤ 2 MPa
Temperature	-30°C to +90°C
Speed	≤ 1 m/s

Materials

Standard	PU06: polyurethane 90 Sh A
Alternative	PU07: polyurethane 85 Sh A

Assembly

Sharp edges should be removed from around the housing in order to avoid damaging the seal lips during installation. A lead-in chamfer on the tube will ease installation.

Advantages

The reduced dimensions, together with the high flexibility of the material, facilitate installation in closed grooves.

Smooth running due to optimum lubricant-retaining sealing lip geometry.

Pressure relief grooves at the back of the seal ensure optimal function even in case of flow-controlled exhaust air.

Please contact us for applications approaching maximum values.

D	d	L	M	H	Reference
5	2,5	2	4		**PEM-0502**
6	3	2,5	5	2	**PEM-0603**
8	4	3	7	2,5	**PEM-0804**
8	4,8	2,7	7	2,3	**PEM-0805**
8	4,8	3	7	2,55	**PEM-0805-1**
10	6	3	9	2,55	**PEM-1006**
12	7	3	11	2,55	**PEM-1207**
13	8	3	12	2,55	**PEM-1308**
14	8	3	13	2,55	**PEM-1408**
15	9	3	14	2,55	**PEM-1509**
16	10	3	15	2,55	**PEM-1610**
17	11	3	16	2,55	**PEM-1711**
18	12	3	17	2,55	**PEM-1812**
20	14	3	19	2,55	**PEM-2014-1**
20	14	4,5	19	4	**PEM-2014**
22	16	3	21	2,55	**PEM-2216**
24	18	3	23	2,55	**PEM-2418**
25	17	6	24	5,5	**PEM-2517**
25	19	3,5	24	3,25	**PEM-2519**
25	19	4,5	24	4	**PEM-2519-1**
28	18	7,5	27	7	**PEM-2818**
28	22	3,5	27	3,25	**PEM-2822**
30	20	5,7	29	5	**PEM-3020**
30	22	3,5	29	3,25	**PEM-3022**
32	24	3,5	31	3,25	**PEM-3224-1**
32	24	6	31	5,5	**PEM-3224**
35	27	3,5	34	3,25	**PEM-3527**
36	28	3,5	35	3,25	**PEM-3628**
38	30	3,5	37	3,25	**PEM-3830**
38	30	6	37	5,5	**PEM-3830-1**
40	30	7,5	39	7	**PEM-4030**
40	32	3,5	39	3,25	**PEM-4032**
42	30	6,5	41	6	**PEM-4230**

D	d	L	M	H	Reference
42	34	3,5	41	3,25	**PEM-4234**
45	37	3,5	44	3,25	**PEM-4537**
50	40	7,5	49	7	**PEM-5040**
50	42	3,5	49	3,25	**PEM-5042**
52	42	4,5	51	4	**PEM-5242**
55	45	7,5	54	7	**PEM-5545**
58	48	4,5	57	4	**PEM-5848**
60	50	5,7	59	5	**PEM-6050-1**
60	50	7,5	59	7	**PEM-6050**
63	53	4,5	62	4	**PEM-6353-1**
63	53	7,5	62	7	**PEM-6353**
65	55	7,5	64	7	**PEM-6555**
68	58	5,5	67	4,7	**PEM-6858**
70	58	9,5	69	8,5	**PEM-7058**
75	63	9,5	74	8,5	**PEM-7563**
80	68	9,5	79	8,5	**PEM-8068**
80	70	4,5	79	4	**PEM-8070**
85	73	9,5	84	8,5	**PEM-8573**
90	78	9,5	89	8,5	**PEM-9078**
90	80	4,5	89	4	**PEM-9080**
100	88	9,5	99	8,5	**PEM-100088**
100	90	4,5	99	4	**PEM-100090**
110	95	11	109	10	**PEM-110095**
120	105	11	119	10	**PEM-120105**
125	105	8,5	124	8,25	**PEM-125105**
125	110	11	124	10	**PEM-125110**
140	120	8,5	139	8,25	**PEM-140120**
160	140	8,5	159	8,25	**PEM-160140**
160	145	11	159	10	**PEM-160145**
180	160	15	179	14	**PEM-180160**
200	180	8,5	199	8,25	**PEM-200180-1**
200	180	15	199	14	**PEM-200180**
250	230	15	249	14	**PEM-250230**