PCM

PU cushioning seal

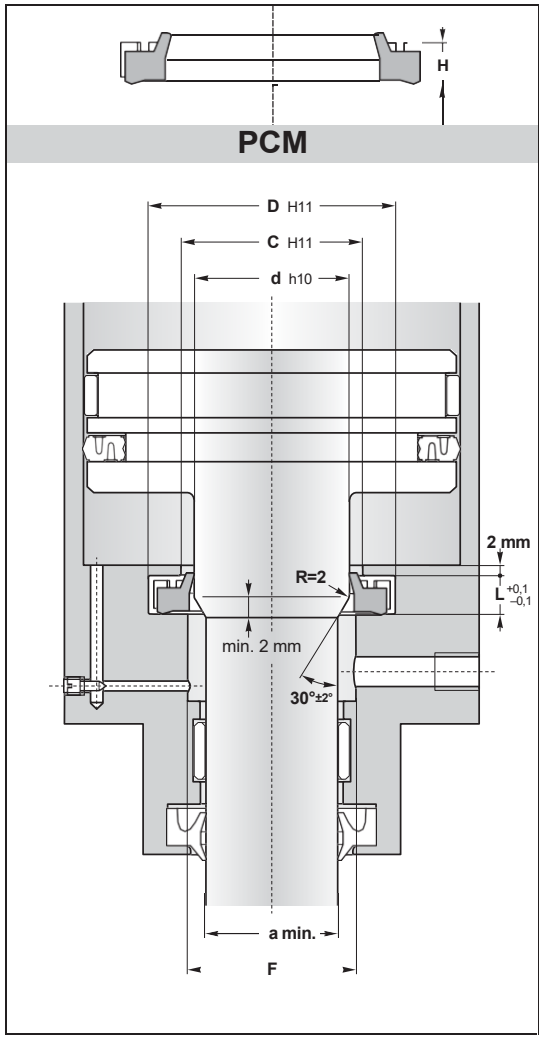

PCM is specially designed for cushioning pistons in pneumatic cylinders

Several elements contribute to the efficiency of the **PCM** seal braking system:

- the scraping profile with lead-in chamfer for better insertion of the shoulder
- the external grooves granting auto-alignment
- the edge at the bottom of the cushioning

Operating conditions

Pressure	≤ 2 MPa
Temperature	-30°C to +90°C
Speed	< 1 m/s
Fluids	air with or without lubrication

Materials

Standard	PU06: polyurethane 90 Sh A
Alternative	PU09: polyurethane 93 Sh A

Assembly

Sharp edges should be removed from around the housing in order to avoid damaging the seal lips during installation. A lead-in chamfer on the rod will ease installation.

Advantages

The use of polyurethane ensures a long service life thanks to the high modulus of elasticity

Very good impact resistance

Please contact us for applications approaching maximum values.

d	D	C	L	a min.	H	F	Reference
6	10	8	3,7	4,5	3,4	6,5	**PCM-6**
8	11,6	10	3,3	7	3	8,5	**PCM-8**
9,5	15	12	4,5	8	4	10	**PCM-9**
10	18	15	7	8	6,5	11	**PCM-10**
12	18	15,5	4,8	10	4,3	13	**PCM-12**
	20	17	7	10	6,5	13	**PCM-12-1**
14	22	19	7	12	6,5	15	**PCM-14**
16	22	21	5,2	14	4,7	17	**PCM-16**
	24	21	7	14	6,5	17	**PCM-16-1**
18	26	23	7	16	6,5	19	**PCM-18**
20	28	24	7	17,5	6,5	21	**PCM-20**
22	30	26	7	19,5	6,5	23	**PCM-22**
25	33	29	7	22,5	6,5	26	**PCM-25**
28	36	32	7	25,5	6,5	29	**PCM-28**
30	40	35	7	27,5	6,5	31,5	**PCM-30**
32	42	37	7	29	6,5	33,5	**PCM-32**
36	46	41	7	33	6,5	37,5	**PCM-36**
40	50	45	7	37	6,5	41,5	**PCM-40**
50	60	55	7	47	6,5	51,5	**PCM-50**
57	74	65	12,5	54	12	60	**PCM-57**
70	87	78	12,5	66	12	73	**PCM-70**
78	95	86	12,5	74	12	81	**PCM-78**