PU single acting piston seal with asymmetrical lips

HydraulicSeals24.com

KER

KER-M

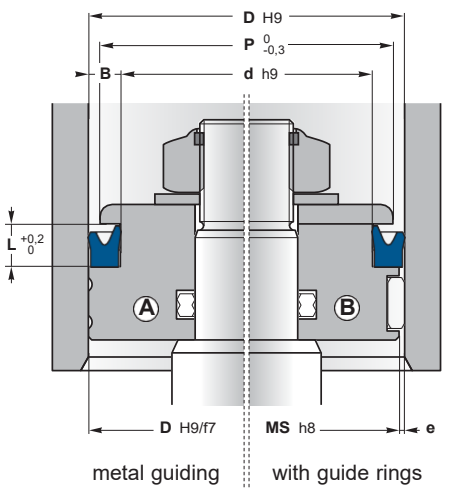

P = d + 1,4 B

MS = D - 2e

Pressure (MPa)	e (mm)	
	D ≤ 60 mm	**D** > 60 mm
5	≤ 0,4	≤ 0,5
10	≤ 0,3	≤ 0,4
20	≤ 0,2	≤ 0,3
30	≤ 0,15	≤ 0,2
40	≤ 0,1	≤ 0,15

KER is designed with a shorter and stronger outer sealing lip to concentrate the load against the dynamic surface.

The sealing lip on the static side is longer to provide a wide contact area and more flexible, therefore more sensitive to pressure fluctuations.

Operating conditions

Pressure	≤ 40 MPa
Temperature	-30°C to 100°C
Speed	≤ 0,5 m/s

Materials

Seal	PU09 or PU10

Assembly

On one-piece pistons Ⓐ

On two-piece pistons Ⓑ

Advantages

Excellent abrasion resistance

Efficient sealing

Simple groove design

Please contact us for applications approaching maximum values.

D	d	L	Reference
14	8	6,8	**KER-1408**
16	10	6,5	**KER-1610-1**
	10	9	**KER-1610**
20	12	5,8	**KER-2012-1**
	12	7,5	**KER-2012**
22	12	9	**KER-2212**
25	10	11	**KER-2510**
	15	9	**KER-2515**
30	15	11	**KER-3015**
	20	9	**KER-3020**
	22	7	**KER-3022**
32	22	9	**KER-3222-1**
	22	11	**KER-3222**
	26	6	**KER-3226**
34	22	10	**KER-3422**
	28	4	**KER-3428**
35	20	11	**KER-3520**
	22	11	**KER-3522-1**
	25	9	**KER-3525**
	27	11	**KER-3527**
37	21	13	**KER-3721**
38	31	5,2	**KER-3831**
40	25	11	**KER-4025**
	30	7,5	**KER-4030-1**
	30	11	**KER-4030**
	32	6,5	**KER-4032-2**
	32	9	**KER-4032**
	33	9	**KER-4033**
42	32	11	**KER-4232**
44	20	12	**KER-4420**
	25	12	**KER-4425**
44,45	34,92	8,7	**KER-4434**
45	30	11	**KER-4530**
50	30	13	**KER-5030**
	32	11	**KER-5032**
	35	9,5	**KER-5035-1**
	35	11	**KER-5035**
	40	5,5	**KER-5040-1**
	40	6	**KER-5040-1**
	40	8	**KER-5040-4**

D	d	L	Reference
50	40	9	**KER-5040-3**
	40	11	**KER-5040**
	42	6	**KER-5042-2**
	42	9	**KER-5042-1**
	42	11	**KER-5042**
52	42	6,3	**KER-5242-2**
	42	10,6	**KER-5242**
55	40	11	**KER-5540**
60	40	13	**KER-6040**
	40	14,5	**KER-6040-1**
	45	11	**KER-6045**
	50	5,5	**KER-6050-1**
	50	7	**KER-6050/3**
	50	8	**KER-6050**
	50	11	**KER-6050-2**
63	43	13	**KER-6343**
	45	11	**KER-6345**
	45	13	**KER-6345-2**
	48	9,5	**KER-6348-3**
	48	11	**KER-6348-1**
	48	13	**KER-6348**
	53	8	**KER-6353**
	53	13	**KER-6353-1**
65	45	13	**KER-6545-1**
	45	14,5	**KER-6545**
	50	11	**KER-6550**
	55	11	**KER-6555-1**
70	50	13	**KER-7050**
	50	14,5	**KER-7050-1**
	50	16	**KER-7050-2**
	55	10,5	**KER-7055-1**
	55	13	**KER-7055**
	60	7	**KER-7060/3**
	60	8	**KER-7060**
	60	13	**KER-7060-1**
	60	14,5	**KER-7060-2**
	62	8,5	**KER-7062**
75	50	15	**KER-7550**
	55	14,5	**KER-7555**
	65	5,5	**KER-7565-1**
	65	7,5	**KER-7565/3**
	65	8	**KER-7565-4**
	65	11	**KER-7565-2**
80	60	13	**KER-8060**
	60	14,5	**KER-8060-1**
	65	13	**KER-8065**
	68	9,5	**KER-8068**
	70	8	**KER-8070**
	70	13	**KER-8070-1**
	72	13	**KER-8072**

PU single acting piston seal with asymmetrical lips

HydraulicSeals24.com

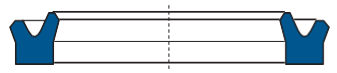

KER

KER-M

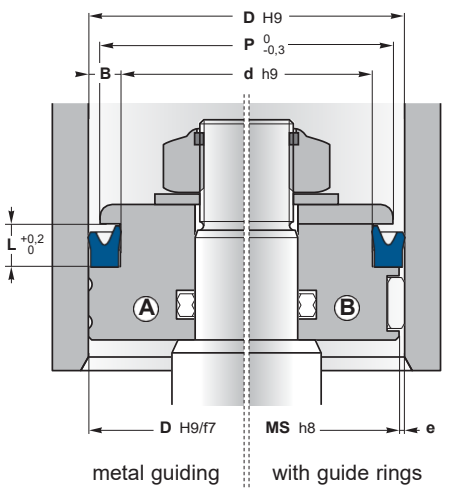

P = d + 1,4 B

MS = D - 2e

KER is designed with a shorter and stronger outer sealing lip to concentrate the load against the dynamic surface.

The sealing lip on the static side is longer to provide a wide contact area and more flexible, therefore more sensitive to pressure fluctuations.

Operating conditions	
Pressure	≤ 40 MPa
Temperature	-30°C to 100°C
Speed	≤ 0,5 m/s

Materials	
Seal	PU09 or PU10

Assembly

On one-piece pistons Ⓐ

On two-piece pistons Ⓑ

Advantages

Excellent abrasion resistance

Efficient sealing

Simple groove design

Please contact us for applications approaching maximum values.

Pressure (MPa)	**e** (mm)	
	D ≤ 60 mm	**D** > 60 mm
5	≤ 0,4	≤ 0,5
10	≤ 0,3	≤ 0,4
20	≤ 0,2	≤ 0,3
30	≤ 0,15	≤ 0,2
40	≤ 0,1	≤ 0,15

D	d	L	Reference
85	65	13	**KER-8565-2**
	65	14,5	**KER-8565**
	70	13	**KER-8570**
	75	11	**KER-8575-1**
	75	13	**KER-8575**
90	70	13	**KER-9070**
	70	14,5	**KER-9070-1**
	75	11	**KER-9075-1**
	75	13	**KER-9075**
	80	5,5	**KER-9080-2**
	80	11	**KER-9080-1**
95	80	13	**KER-9580**
	85	7,5	**KER-9585-2**
	85	8	**KER-9585**
	85	9,5	**KER-9585-1**
	85	14,5	**KER-9585/3**
100	80	11	**KER-10080-2**
	80	13	**KER-10080**
	80	14,5	**KER-10080-1**
	85	10	**KER-10085-1**
	85	13	**KER-10085**
	88	9,5	**KER-10088**
	90	8	**KER-10090**
105	90	13	**KER-10590**
110	90	13	**KER-11090**
	95	13	**KER-11095**
	100	8	**KER-110100**

D	d	L	Reference
115	100	11,5	**KER-115100**
	100	13	**KER-115100-2**
120	100	13	**KER-120100**
	103	17	**KER-120103**
	105	13	**KER-120105**
125	100	16	**KER-125100-1**
	105	13	**KER-125105**
	105	16	**KER-125105-1**
	110	11	**KER-125110**
130	110	13	**KER-130110**
	110	16	**KER-130110-1**
140	120	13	**KER-140120**
150	125	14,5	**KER-150125**
	130	16	**KER-150130**
160	140	14,5	**KER-160140**
170	150	16	**KER-170150**
180	160	14,5	**KER-180160**
	160	16	**KER-180160-M**
200	175	17	**KER-200175**
220	200	16	**KER-220200-M**
250	220	19	**KER-250220-M**
280	250	19	**KER-280250**