Fabric reinforced single acting piston seal with guide ring

HydraulicSeals24.com

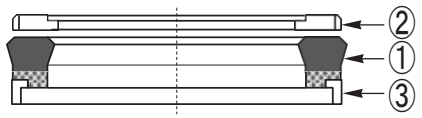

KEPF

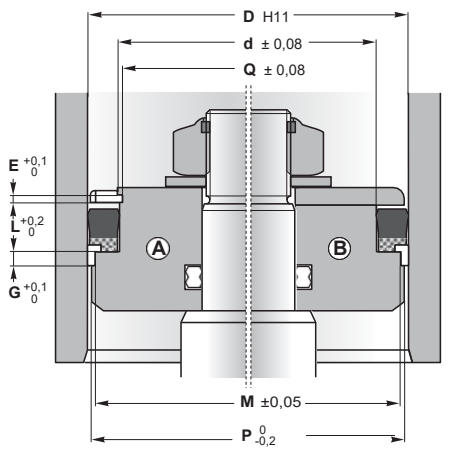

KEPF is composed of an elastomer rubbersealing element, a fabric reinforced base and an angular integrated wear ring which guides the piston in the cylinder and supports radial loads. The fabric reinforced base **prevents the seal from extrusion** and the guide/back-up rings enables higher pressure conditions and minimises the extrusion gap. The sealing element has a low compression set and the sealing lips are produced to give an optimum efficiency.

KEPF is also composed of a keeper ring which helps the assembly in the open groove of the piston seal, especially those with a large radial section.

Operating conditions

Pressure	≤ 50 MPa
Temperature	-30°C to 120°C
Speed	≤ 0,5 m/s

Materials

Sealing element ①	N8T60/N8T60-C
Keeper ring **KR** ②	PO0WC
Guide ring ③	PO0WC

Assembly

On one-piece pistons Ⓐ
On two-piece pistons Ⓑ

Advantages

Efficient sealing even at low pressure
Small section
Extrusion resistance at high pressure

Please contact us for applications approaching maximum values.

D	d	L	G	E	M	P	Q	Reference
50	30	14,5	6,35	3,35	44,3	49	25,8	**KEPF-196118**
63	45	11	6,35	3,1	58,4	62	40,84	**KEPF-248177**
70	50	14,5	6,35	3,35	64,2	69	45,84	**KEPF-275196**
80	60	14,5	6,35	3,35	74,3	79	55,8	**KEPF-314236**
90	70	14,5	6,35	3,35	84,15	89	66,1	**KEPF-354275**
100	80	14,5	6,35	3,35	94,15	99	75,84	**KEPF-393314**
104,5	85	13	6,35	3,35	98,9	103,5	81,1	**KEPF-411334**
110	90	13	6,35	3,1	104,15	109	85,9	**KEPF-433354-1**
115	95	14,5	6,35	3,35	109,9	114	90,5	**KEPF-452374**
125	105	12,5	6,35	3,35	119,15	124	101	**KEPF-492413**