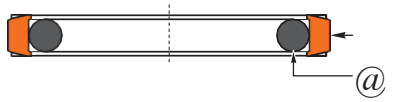


KDEH

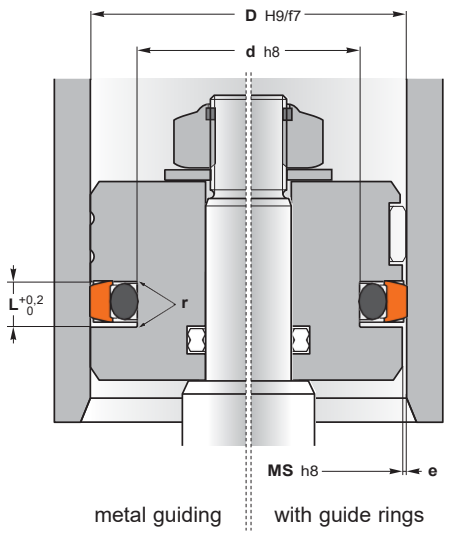


**MS = D - 2e**

| Pressure | 10 MPa | 20 MPa | 30 MPa | 40 MPa |
|---|---|---|---|---|
| **L** (mm) | **e** (mm) | | | |
| 2,2 | 0,35 | 0,23 | 0,18 | 0,15 |
| 3,2 | 0,4 | 0,25 | 0,2 | 0,15 |
| 4,2 | 0,4 | 0,25 | 0,2 | 0,18 |
| 6,3 | 0,45 | 0,28 | 0,23 | 0,18 |
| 8,1 | 0,55 | 0,35 | 0,25 | 0,2 |
| > 40 MPa => **e** = H8/f8 | | | | |

**KDEH** has a dynamic seal element that, due to the special design, improves the pressure distribution and drastically reduces the friction. It is made of a special high resistance polymer.

It increases the performance and service life in applications where properties such as **abrasion resistance** and **tear strength** are critical. Conical shaped notches allow the seal to energise without risk of extrusion of O-ring.

A standard size O-ring with low permanent deformation is the energising component on the static side.

**Operating conditions**

| | |
|---|---|
| Pressure | ≤ 50 MPa |
| Temperature | -30°C to 100°C |
| Speed | ≤ 0,5 m/s |

**Materials**

| | |
|---|---|
| Dynamic sealing element ① | TPE |
| Energising element ② | NBR 70 Sh A |

**Assembly**

On one-piece pistons

**Advantages**

- Easy installation on a solid piston
- Returns to the size immediately after assembly
- Low friction and no tendency of stick-slip
- Simple groove design and space-saving construction
- Excellent wear-resistance
- High resistance against extrusion
- Extended service life

**Please contact us for applications approaching maximum values.**

| D | d | L | ISO 7425-1 | Reference |
|---|---|---|---|---|
| **12** | 7,1 | 2,2 | • | **KDEH-12** |
| **17** | 12,1 | 2,2 | | **KDEH-17** |
| **20** | 12,5 | 3,2 | • | **KDEH-20** |
| **25** | 17,5 | 3,2 | • | **KDEH-25** |
| **28** | 20,5 | 3,2 | | **KDEH-28** |
| **30** | 22,5 | 3,2 | | **KDEH-30** |
| **32** | 24,5 | 3,2 | • | **KDEH-32** |
| **35** | 27,5 | 3,2 | | **KDEH-35** |
| **40** | 29 | 4,2 | • | **KDEH-40-1** |
| | 32,5 | 3,2 | • | **KDEH-40** |
| **45** | 34 | 4,2 | | **KDEH-45** |
| **48** | 37 | 4,2 | | **KDEH-48** |
| **50** | 34,5 | 6,3 | • | **KDEH-50-1** |
| | 39 | 4,2 | • | **KDEH-50** |

| D | d | L | ISO 7425-1 | Reference |
|---|---|---|---|---|
| **55** | 44 | 4,2 | | **KDEH-55** |
| **60** | 44,5 | 6,3 | | **KDEH-60-1** |
| | 49 | 4,2 | | **KDEH-60** |
| **63** | 47,5 | 6,3 | • | **KDEH-63-1** |
| | 52 | 4,2 | • | **KDEH-63** |
| **65** | 49,5 | 6,3 | | **KDEH-65** |
| | 52,0 | 6,3 | | **KDEH-65-1** |
| **70** | 59 | 4,2 | | **KDEH-70** |
| **75** | 64 | 4,2 | | **KDEH-75** |
| **80** | 64,5 | 6,3 | • | **KDEH-80** |
| **90** | 74,5 | 6,3 | | **KDEH-90** |
| **95** | 79,5 | 6,3 | | **KDEH-95** |
| **100** | 84,5 | 6,3 | • | **KDEH-100** |
| **140** | 127,6 | 5,5 | | **KDEH-140** |