HydraulikDichtungen24.de

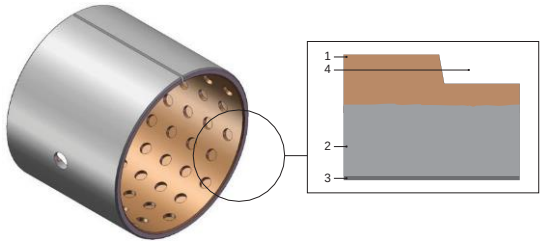

1 Bronze
2 Steel
3 Surface protection
4 Lubrication pockets

GL3 bi-metallic bushings are formed from steel strips with alloy lining material in bronze CuPb10Sn10. In the bronze alloy sliding layer are circular lubrication pockets machined allowing long-term lubrification.

GL3 are suitable for medium loads at mid-high speed rotation or oscillating movement.

Technical specification

Temperature	- 40 to + 150°C
Friction coefficient	0,05 to 0,15
Maximum load	
Dynamic	140 N/mm²
Static	250 N/mm²
Maximum speed	
With grease	2,5 m/s
With oil	10 m/s
PV-factor	
With grease	2,8 N/mm². m/s
With oil	10 N/mm². m/s
Shaft roughness	Ra < 0,8 µm
Shaft hardness	HB > 400

Advantages

- For low speed oscillation application
- Absorption of noise and vibrations
- Re-lubrication possible
- Hydrodynamic applications possible
- High loads
- Low wear and friction
- High sliding speed
- To be used when it is difficult to bring in an oil film
- Low clearance during operation
- Limited dimensions

Please contact us for applications approaching maximum values.

GL3

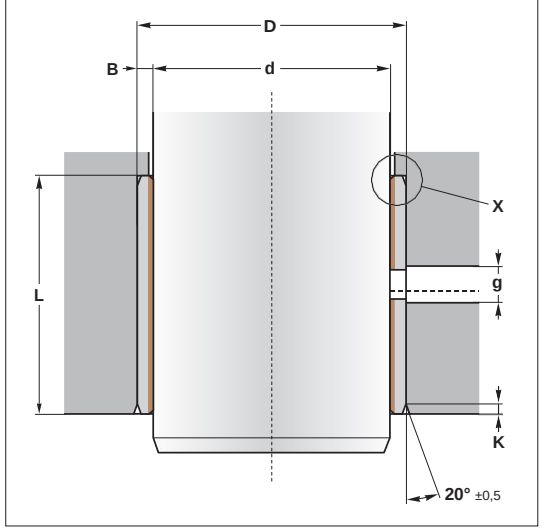

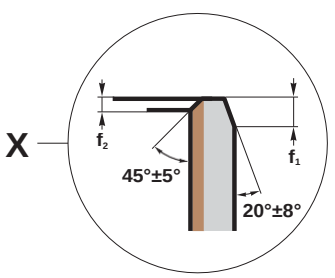

D	K
< 50	0,8 ±0,3
50 < 150	1,5 ±0,5
> 150	2,5 ±1

B	f1	f2
1	0,6	0,3
1,5	0,6	0,4
2	1,2	0,4
2,5	1,8	0,6

Tolerances		
d	D	L
h7 - h8	H7	± 0,25

d	D	L	g	Reference
10	12	10	4	**GL3 1010**
	12	15	4	**GL3 1015**
12	14	10	4	**GL3 1210**
	14	15	4	**GL3 1215**
	14	20	4	**GL3 1220**
14	16	15	4	**GL3 1415**
	16	20	4	**GL3 1420**
	16	25	4	**GL3 1425**
15	17	15	4	**GL3 1515**
	17	20	4	**GL3 1520**
	17	25	4	**GL3 1525**
16	18	15	4	**GL3 1615**
	18	20	4	**GL3 1620**
	18	25	4	**GL3 1625**
18	21	15	4	**GL3 1815**
	21	20	4	**GL3 1820**
	21	25	4	**GL3 1825**
20	23	10	4	**GL3 2010**
	23	15	4	**GL3 2015**
	23	20	4	**GL3 2020**
	23	25	4	**GL3 2025**
	23	30	4	**GL3 2030**
22	25	15	6	**GL3 2215**
	25	20	6	**GL3 2220**
	25	25	6	**GL3 2225**
	25	30	6	**GL3 2230**
25	28	15	6	**GL3 2515**
	28	20	6	**GL3 2520**
	28	25	6	**GL3 2525**
	28	30	6	**GL3 2530**
28	32	20	6	**GL3 2820**
	32	25	6	**GL3 2825**
	32	30	6	**GL3 2830**
30	34	20	6	**GL3 3020**
	34	25	6	**GL3 3025**
	34	30	6	**GL3 3030**
	34	40	6	**GL3 3040**

d	D	L	g	Reference
32	36	20	6	**GL3 3220**
	36	25	6	**GL3 3225**
	36	30	6	**GL3 3230**
	36	40	6	**GL3 3240**
35	39	15	6	**GL3 3515**
	39	20	6	**GL3 3520**
	39	25	6	**GL3 3525**
	39	30	6	**GL3 3530**
	39	35	6	**GL3 3535**
	39	40	6	**GL3 3540**
	39	50	6	**GL3 3550**
40	44	20	8	**GL3 4020**
	44	25	8	**GL3 4025**
	44	30	8	**GL3 4030**
	44	40	8	**GL3 4040**
	44	50	8	**GL3 4050**
45	50	20	8	**GL3 4520**
	50	25	8	**GL3 4525**
	50	30	8	**GL3 4530**
	50	40	8	**GL3 4540**
	50	45	8	**GL3 4545**
	50	50	8	**GL3 4550**
	50	60	8	**GL3 4560**
	50	63	8	**GL3 4563**
	50	70	8	**GL3 4570**
50	55	30	8	**GL3 5030**
	55	40	8	**GL3 5040**
	55	50	8	**GL3 5050**
	55	60	8	**GL3 5060**
55	60	20	8	**GL3 5520**
	60	40	8	**GL3 5540**
	60	50	8	**GL3 5550**
	60	60	8	**GL3 5560**
60	65	30	8	**GL3 6030**
	65	35	8	**GL3 6035**
	65	40	8	**GL3 6040**
	65	45	8	**GL3 6045**
	65	50	8	**GL3 6050**
	65	60	8	**GL3 6060**
	65	70	8	**GL3 6070**

GL3

Bi-metallic rolled bushings

HydraulikDichtungen24.de

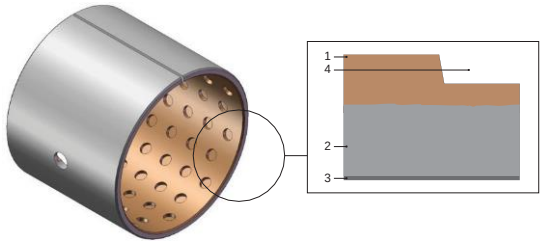

1 Bronze
2 Steel
3 Surface protection
4 Lubrication pockets

GL3 bi-metallic bushings are formed from steel strips with alloy lining material in bronze CuPb10Sn10. In the bronze alloy sliding layer are circular lubrication pockets machined allowing long-term lubrification.

GL3 are suitable for medium loads at mid-high speed rotation or oscillating movement.

Technical specification

Temperature	- 40 to + 150°C
Friction coefficient	0,05 to 0,15
Maximum load	
Dynamic	140 N/mm²
Static	250 N/mm²
Maximum speed	
With grease	2,5 m/s
With oil	10 m/s
PV-factor	
With grease	2,8 N/mm². m/s
With oil	10 N/mm². m/s
Shaft roughness	Ra < 0,8 µm
Shaft hardness	HB > 400

Advantages

- For low speed oscillation application
- Absorption of noise and vibrations
- Re-lubrication possible
- Hydrodynamic applications possible
- High loads
- Low wear and friction
- High sliding speed
- To be used when it is difficult to bring in an oil film
- Low clearance during operation
- Limited dimensions

Please contact us for applications approaching maximum values.

GL3

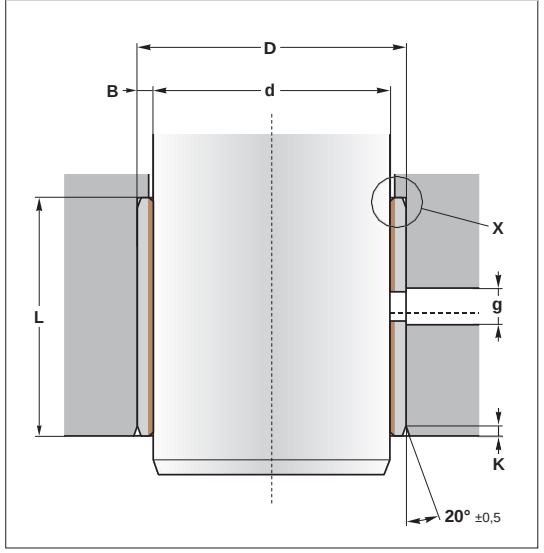

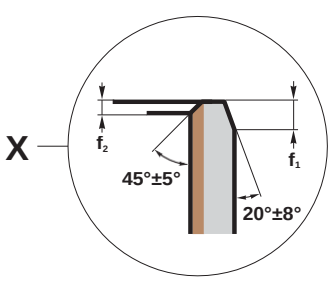

D	K
< 50	0,8 ±0,3
50 < 150	1,5 ±0,5
> 150	2,5 ±1

B	f1	f2
1	0,6	0,3
1,5	0,6	0,4
2	1,2	0,4
2,5	1,8	0,6

Tolerances		
d	D	L
h7 - h8	H7	± 0,25

d	D	L	g	Reference
65	70	40	8	**GL3 6540**
	70	50	8	**GL3 6550**
	70	60	8	**GL3 6560**
	70	70	8	**GL3 6570**
70	75	40	8	**GL3 7040**
	75	50	8	**GL3 7050**
	75	60	8	**GL3 7060**
	75	65	8	**GL3 7065**
	75	70	8	**GL3 7070**
	75	80	8	**GL3 7080**
75	80	40	9,5	**GL3 7540**
	80	50	9,5	**GL3 7550**
	80	60	9,5	**GL3 7560**
	80	80	9,5	**GL3 7580**
80	85	40	9,5	**GL3 8040**
	85	50	9,5	**GL3 8050**
	85	60	9,5	**GL3 8060**
	85	80	9,5	**GL3 8080**
	85	100	9,5	**GL3 80100**
85	90	40	9,5	**GL3 8540**
	90	60	9,5	**GL3 8560**
	90	80	9,5	**GL3 8580**
	90	100	9,5	**GL3 85100**
90	95	40	9,5	**GL3 9040**
	95	50	9,5	**GL3 9050**
	95	60	9,5	**GL3 9060**
	95	70	9,5	**GL3 9070**
	95	75	9,5	**GL3 9075**
	95	80	9,5	**GL3 9080**
	95	90	9,5	**GL3 9090**
95	100	60	9,5	**GL3 9560**
100	105	50	9,5	**GL3 10050**
	105	60	9,5	**GL3 10060**
	105	80	9,5	**GL3 10080**
	105	95	9,5	**GL3 10095**
110	115	60	9,5	**GL3 11060**

d	D	L	g	Reference
115	120	50	9,5	**GL3 11550**
120	125	25	9,5	**GL3 12025**
	125	50	9,5	**GL3 12050**
	125	100	9,5	**GL3 120100**
130	135	60	9,5	**GL3 13060**
	135	100	9,5	**GL3 130100**
140	145	100	9,5	**GL3 140100**
150	155	30	9,5	**GL3 15030**
	155	60	9,5	**GL3 15060**
	155	100	9,5	**GL3 150100**
160	165	100	9,5	**GL3 160100**
170	175	60	9,5	**GL3 17060**
180	185	60	9,5	**GL3 18060**
	185	100	9,5	**GL3 180100**
245	250	50	9,5	**GL3 24550**
	250	60	9,5	**GL3 24560**