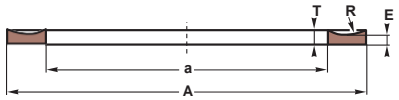

BU-FPM

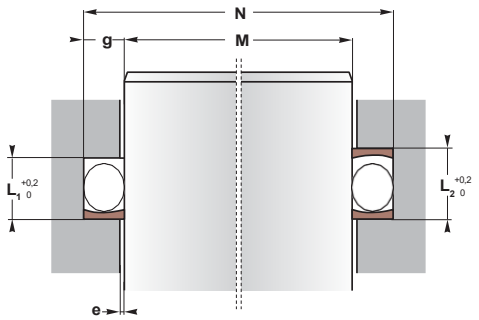

Internal housing

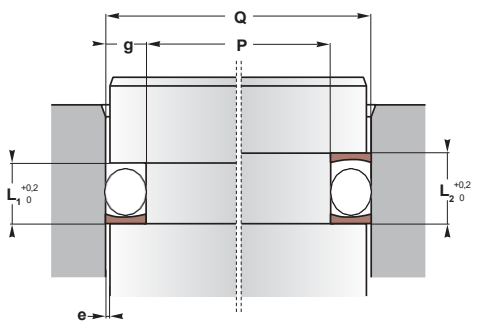

External housing

Pressure (MPa)	25	30	35	40
e max (mm)	0,2	0,15	0,1	0,05

BU-FPM back-up ring is a closed ring with a concave shaped cross-section. For these back-up rings, we use a Viton® elastomer of 90°shore A hardness to guarantee a high level of resistance to extrusion and abrasion.

Their design tends to keep the O-ring in its original form, even at high pressure. They minimize distortion of the O-ring who can therefore withstand better against higher pressure loads. This produces a better sealing effect and **increases the lifetime of the O-ring**.

BU-FPM rings are continuous. They do not have a cut (unlike open PTFE rings) and they can be stretched over a piston during assembly. Hence they contact the O-ring uniformly, and do not cause localised wear spots.

BU-FPM back-up ring has a symmetrical profile and can therefore be used in both internal and external sealing systems.

Operating conditions

Pressure	≤ 40 MPa
Temperature	-20°C to 200°C
Fluids	mineral oils, HFA, HFB, HFD

Materials

FPM 90 Sh A	colour: black

Assembly

In one-piece housings

Advantages

Easy assembly
Closed ring (uncut)
For inner and outer housings
Extended service life of the O-ring

Please contact us for applications approaching maximum values.

d (O-ring)	g	L1	L2	E	T
1,78	1,45	3,6	5	1,14	1,24
2,62	2,25	4,5	5,9	1,14	1,35
3,53	3,1	5,6	7	1,02	1,27
5,34	4,7	7,9	9,6	1,52	1,93
7	6,1	10,7	13,2	2,44	2,97

section	O-ring D x d	a	A	E	Reference
1,78	9,25 x 1,78	9,91	12,61	1,14	**BU-012-FPM**
	25,12 x 1,78	25,86	28,56	1,14	**BU-022-FPM**
	28,3 x 1,78	29,03	31,73	1,14	**BU-024-FPM**
	34,65 x 1,78	35,38	38,08	1,14	**BU-028-FPM**
	37,82 x 1,78	38,56	41,26	1,14	**BU-029-FPM**
2,62	10,77 x 2,62	11,48	15,84	1,14	**BU-111-FPM**
	12,37 x 2,62	13,08	17,44	1,14	**BU-112-FPM**
	29,82 x 2,62	30,63	34,99	1,14	**BU-123-FPM**
	36,17 x 2,62	36,98	41,34	1,14	**BU-127-FPM**
	39,34 x 2,62	40,16	44,52	1,14	**BU-129-FPM**
	40,94 x 2,62	41,73	46,09	1,14	**BU-130-FPM**
	42,52 x 2,62	43,33	47,69	1,14	**BU-131-FPM**
	44,12 x 2,62	44,91	49,27	1,14	**BU-132-FPM**
	53,64 x 2,62	54,43	58,79	1,14	**BU-138-FPM**
	55,25 x 2,62	56,03	60,39	1,14	**BU-139-FPM**
	63,17 x 2,62	63,96	68,32	1,14	**BU-144-FPM**
3,53	36,09 x 3,53	37,06	43,06	1,02	**BU-221-FPM**
	37,69 x 3,53	38,66	44,66	1,02	**BU-222-FPM**
	40,87 x 3,53	41,83	47,83	1,02	**BU-223-FPM**
	44,04 x 3,53	45,01	51,01	1,02	**BU-224-FPM**
	47,22 x 3,53	48,18	54,18	1,02	**BU-225-FPM**
	53,57 x 3,53	54,53	60,53	1,02	**BU-227-FPM**
	56,74 x 3,53	57,71	63,71	1,02	**BU-228-FPM**
	59,92 x 3,53	60,88	66,88	1,02	**BU-229-FPM**
	63,09 x 3,53	64,06	70,06	1,02	**BU-230-FPM**
	66,27 x 3,53	66,83	72,83	1,02	**BU-231-FPM**
	72,62 x 3,53	73,18	79,18	1,02	**BU-233-FPM**
	75,79 x 3,53	76,35	82,35	1,02	**BU-234-FPM**
	82,14 x 3,53	82,7	88,7	1,02	**BU-236-FPM**
	94,84 x 3,53	95,4	101,4	1,02	**BU-240-FPM**
	104,37 x 3,53	104,93	110,93	1,02	**BU-243-FPM**
	132,94 x 3,53	133,81	139,81	1,02	**BU-252-FPM**
5,34	56,52 x 5,34	57,61	66,91	1,52	**BU-331-FPM**
	88,27 x 5,34	89,48	98,78	1,52	**BU-341-FPM**
	100,97 x 5,34	102,31	111,61	1,52	**BU-345-FPM**
	113,67 x 5,34	115,01	124,31	1,52	**BU-349-FPM**
	116,84 x 5,34	118,19	127,49	1,52	**BU-350-FPM**
	129,54 x 5,34	130,89	140,19	1,52	**BU-354-FPM**
	151,77 x 5,34	153,11	162,41	1,52	**BU-361-FPM**
	158,12 x 5,34	159,46	168,76	1,52	**BU-362-FPM**
	354,97 x 5,34	356,31	365,61	1,52	**BU-383-FPM**
	380,37 x 5,34	381,71	391,01	1,52	**BU-384-FPM**
7	202,57 x 7	203,81	215,79	2,44	**BU-445-FPM**
(6,99)	304,17 x 7	305,41	317,39	2,44	**BU-453-FPM**
	329,57 x 7	330,81	342,79	2,44	**BU-455-FPM**
	342,27 x 7	343,51	355,49	2,44	**BU-456-FPM**
	582,68 x 7	584,3	596,28	2,44	**BU-472-FPM**