Endless TPE back-up rings

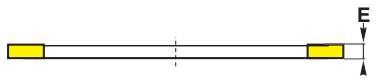

BI

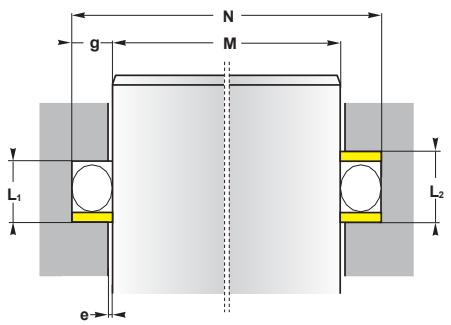

Internal housing

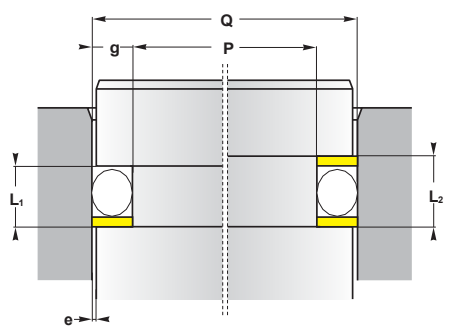

External housing

Pressure (MPa)	25	30	35	40	50
e max (mm)	0,25	0,2	0,15	0,1	0,05

d (O-ring)	**g**	**L1**	**L2**	**E**
1,78	1,55	3,8	5,2	1,4
2,62	2,25	5	6,4	1,4
3,53	3,1	6,2	7,6	1,4
5,34	4,7	8,8	10,5	1,7
7	6,1	12	14,5	2,5

BI back-up rings are used in conjunction with O-rings for both static and dynamic sealing applications. They prevent extrusion of the O-ring when it is subjected to high pressures, or when the extrusion gaps are excessive.

If pressure arises on only one side of the O-ring, it will suffice to fit one anti-extrusion ring on the side not exposed to pressure.

For double-acting applications, **two back-up rings** should be used, one on each side of the O-ring.

BI back-up rings are flat continuous anti-extrusion rings without a cut or a spiral shape that could cause system failure under extreme loads. They are made out of an elastic thermoplastic polyester resin which allows them to be stretched over pistons for easy installation and without any auxiliaries.

Operating conditions

Pressure	≤ 50 MPa
Temperature	-30°C to 110°C
Fluids	mineral oil, HFA, HFB

Materials

TPE	polyester 55 Sh D

Assembly

In one-piece housings

Advantages

Easy assembly

Endless for internal and external housings

Please contact us for applications approaching maximum values.

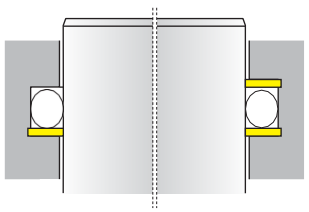

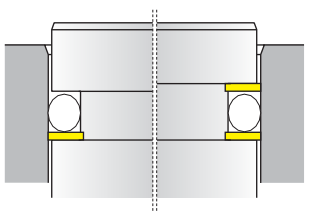

Advise : for static sealing, with machining of housings following the two drawings above, it is possible to use BI-back-up rings respecting the DIN-ISO norm (static sealing).

O-ring cross section	O-ring D x d	int. housing M	int. housing N	ext. housing P	ext. housing Q	Reference
1,78	6,07 x 1,78	7	10,1	6,9	10	**BI-010-610**
	7,65 x 1,78	8	11,1	7,9	11	**BI-011**
	8,73 x 1,78	9	12,1	8,9	12	**BI-611**
	9,25 x 1,78	9	12,1	9,9	13	**BI-012**
	10,82 x 1,78	11	14,1	10,9	14	**BI-013**
	12,42 x 1,78	13	16,1	12,9	16	**BI-014**
	14,0 x 1,78	14	17,1	14,9	18	**BI-015**
	15,6 x 1,78	16	19,1	15,9	19	**BI-016**
	17,17 x 1,78	17	20,1	17,9	21	**BI-017**
	20,35 x 1,78	21	24,1	20,9	24	**BI-019**
	21,95 x 1,78	22	25,1	22,9	26	**BI-020**
	28,3 x 1,78	28	31,1	28,9	32	**BI-024**
	29,87 x 1,78	30	33,1	29,9	33	**BI-025**
	31,47 x 1,78	32	35,1	31,9	35	**BI-026**
	33,05 x 1,78	33	36,1	33,9	37	**BI-027**
	37,82 x 1,78	38	41,1	37,9	41	**BI-029**
	41,0 x 1,78	41	44,1	41,9	45	**BI-030**
	47,35 x 1,78	48	51,1	47,9	51	**BI-032**
2,62	7,6 x 2,62	8	12,5	8,5	13	**BI-109**
	9,19 x 2,62	10	14,5	10,5	15	**BI-110-613**
	10,77 x 2,62	11	15,5	11,5	16	**BI-111**
	11,91 x 2,62	12	16,5	12,5	17	**BI-614**
	12,37 x 2,62	12,5	17	13,5	18	**BI-112**
	13,94 x 2,62	14	18,5	14,5	19	**BI-113**
	15,08 x 2,62	15	19,5	15,5	20	**BI-616**
	15,54 x 2,62	16	20,5	16,5	21	**BI-114-809**
	17,12 x 2,62	17	21,5	17,5	22	**BI-115**
	17,86 x 2,62	18	22,5	18,5	23	**BI-617**
	18,72 x 2,62	19	23,5	19,5	24	**BI-116**
	20,3 x 2,62	20	24,5	20,5	25	**BI-117**
	20,64 x 2,62	21	25,5	21,5	26	**BI-812**
	21,89 x 2,62	22	26,5	22,5	27	**BI-118-813**
	23,47 x 2,62	24	28,5	24,5	29	**BI-119-814**
	25,07 x 2,62	25	29,5	25,5	30	**BI-120**
	26,64 x 2,62	27	31,5	27,5	32	**BI-121**
	28,24 x 2,62	28	32,5	28,5	33	**BI-122**
	29,82 x 2,62	30	34,5	30,5	35	**BI-123**
	31,42 x 2,62	32	36,5	32,5	37	**BI-124**
	32,99 x 2,62	33	37,5	33,5	38	**BI-125**
	34,57 x 2,62	35	39,5	35,5	40	**BI-126**
	36,17 x 2,62	36	40,5	36,5	41	**BI-127**
	37,77 x 2,62	38	42,5	38,5	43	**BI-128**

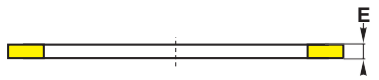

BI

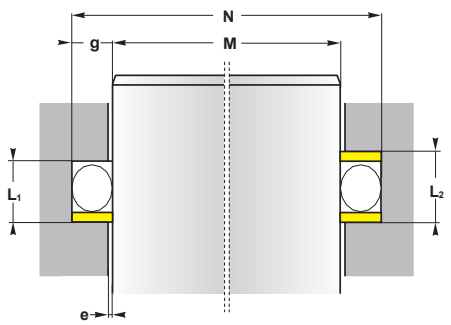

Internal housing

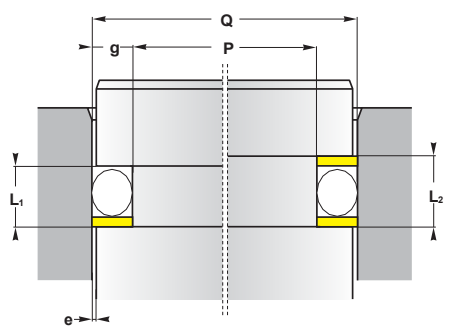

External housing

Pressure (MPa)	25	30	35	40	50
e max (mm)	0,25	0,2	0,15	0,1	0,05

d (O-ring)	g	L1	L2	E
1,78	1,55	3,8	5,2	1,4
2,62	2,25	5	6,4	1,4
3,53	3,1	6,2	7,6	1,4
5,34	4,7	8,8	10,5	1,7
7	6,1	12	14,5	2,5

BI back-up rings are used in conjunction with O-rings for both static and dynamic sealing applications. They prevent extrusion of the O-ring when it is subjected to high pressures, or when the extrusion gaps are excessive.

If pressure arises on only one side of the O-ring, it will suffice to fit one anti-extrusion ring on the side not exposed to pressure.

For double-acting applications, **two back-up rings** should be used, one on each side of the O-ring.

BI back-up rings are flat continuous anti-extrusion rings without a cut or a spiral shape that could cause system failure under extreme loads. They are made out of an elastic thermoplastic polyester resin which allows them to be stretched over pistons for easy installation and without any auxiliaries.

Operating conditions

Pressure	≤ 50 MPa
Temperature	-30°C to 110°C
Fluids	mineral oil, HFA, HFB

Materials

TPE	polyester 55 Sh D

Assembly

In one-piece housings

Advantages

Easy assembly

Endless for internal and external housings

Please contact us for applications approaching maximum values.

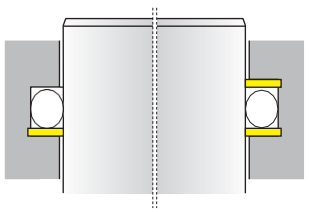

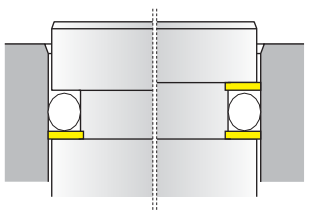

Advise : for static sealing, with machining of housings following the two drawings above, it is possible to use BI-back-up rings respecting the DIN-ISO norm (static sealing).

O-ring cross section	O-ring D x d	int. housing M	int. housing N	ext. housing P	ext. housing Q	Reference
2,62	39,34 x 2,62	40	44,5	40,5	45	**BI-129**
	40,94 x 2,62	41	45,5	41,5	46	**BI-130**
	42,52 x 2,62	43	47,5	43,5	48	**BI-131**
	44,12 x 2,62	44	48,5	44,5	49	**BI-132**
	45,69 x 2,62	46	50,5	46,5	51	**BI-133**
	47,29 x 2,62	48	52,5	48,5	53	**BI-134**
	48,9 x 2,62	49	53,5	48,5	54	**BI-135**
	50,47 x 2,62	51	55,5	51,5	56	**BI-136**
	52,07 x 2,62	52	56,5	52,5	57	**BI-137**
	53,64 x 2,62	54	58,5	54,5	59	**BI-138**
	55,25 x 2,62	55	59,5	56,5	61	**BI-139**
	56,82 x 2,62	57	61,5	57,5	62	**BI-140**
	58,42 x 2,62	59	63,5	59,5	64	**BI-141**
	59,99 x 2,62	60	64,5	60,5	65	**BI-142**
	61,6 x 2,62	62	66,5	62,5	67	**BI-143**
	63,17 x 2,62	63	67,5	63,5	68	**BI-144**
	64,77 x 2,62	65	69,5	65,5	70	**BI-145**
	66,34 x 2,62	67	71,5	67,5	72	**BI-146**
	67,95 x 2,62	68	72,5	68,5	73	**BI-147**
	69,52 x 2,62	70	74,5	70,5	75	**BI-148**
	71,12 x 2,62	71	75,5	71,5	76	**BI-149**
	72,69 x 2,62	73	77,5	73,5	78	**BI-150**
	82,22 x 2,62	82	86,5	83,5	88	**BI-152**
	88,57 x 2,62	89	93,5	89,5	94	**BI-153**
	94,92 x 2,62	95	99,5	96,5	101	**BI-154**
	113,97 x 2,62	114	118,5	115,5	120	**BI-157**
3,53	18,64 x 3,53	19	25,2	19,8	26	**BI-210**
	20,22 x 3,53	20	26,2	21,8	28	**BI-211**
	21,82 x 3,53	22	28,2	22,8	29	**BI-212**
	23,39 x 3,53	23	29,2	23,8	30	**BI-213**
	24,99 x 3,53	25	31,2	25,8	32	**BI-214**
	25,8 x 3,53	26	32,2	26,8	33	**BI-618**
	26,57 x 3,53	27	33,2	27,8	34	**BI-215**
	28,17 x 3,53	28	34,2	28,8	35	**BI-216**
	29,74 x 3,53	30	36,2	30,8	37	**BI-217**
	31,34 x 3,53	31	37,2	31,8	38	**BI-218**
	32,92 x 3,53	33	39,2	33,8	40	**BI-219**
	34,52 x 3,53	35	41,2	35,8	42	**BI-220**
	36,09 x 3,53	36	42,2	36,8	43	**BI-221**
	37,69 x 3,53	38	44,2	38,8	45	**BI-222**
	39,7 x 3,53	40	46,2	39,8	46	**BI-824**

Endless TPE back-up rings

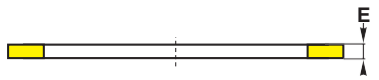

BI

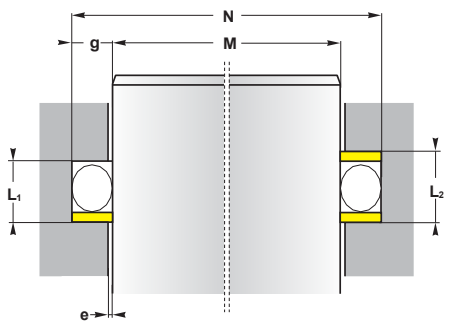

Internal housing

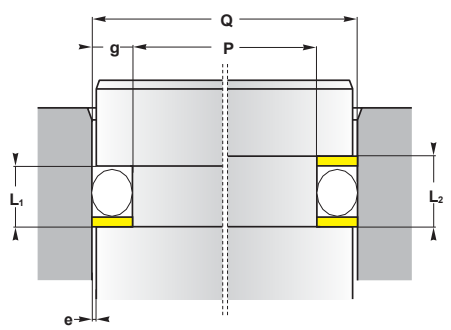

External housing

Pressure (MPa)	25	30	35	40	50
e max (mm)	0,25	0,2	0,15	0,1	0,05

d (O-ring)	**g**	**L1**	**L2**	**E**
1,78	1,55	3,8	5,2	1,4
2,62	2,25	5	6,4	1,4
3,53	3,1	6,2	7,6	1,4
5,34	4,7	8,8	10,5	1,7
7	6,1	12	14,5	2,5

BI back-up rings are used in conjunction with O-rings for both static and dynamic sealing applications. They prevent extrusion of the O-ring when it is subjected to high pressures, or when the extrusion gaps are excessive.

If pressure arises on only one side of the O-ring, it will suffice to fit one anti-extrusion ring on the side not exposed to pressure.

For double-acting applications, **two back-up rings** should be used, one on each side of the O-ring.

BI back-up rings are flat continuous anti-extrusion rings without a cut or a spiral shape that could cause system failure under extreme loads. They are made out of an elastic thermoplastic polyester resin which allows them to be stretched over pistons for easy installation and without any auxiliaries.

Operating conditions

Pressure	≤ 50 MPa
Temperature	-30°C to 110°C
Fluids	mineral oil, HFA, HFB

Materials

TPE	polyester 55 Sh D

Assembly

In one-piece housings

Advantages

Easy assembly

Endless for internal and external housings

Please contact us for applications approaching maximum values.

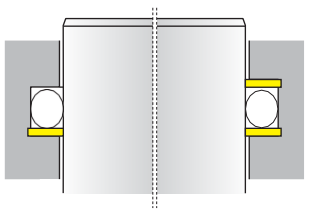

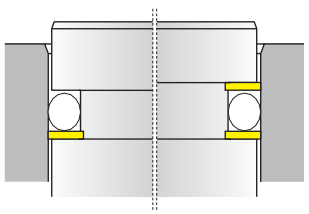

Advise : for static sealing, with machining of housings following the two drawings above, it is possible to use BI-back-up rings respecting the DIN-ISO norm (static sealing).

O-ring cross section	O-ring D x d	int. housing M	int. housing N	ext. housing P	ext. housing Q	Reference
3,53	40,87 x 3,53	42	48,2	41,8	48	**BI-223-825**
	42,86 x 3,53	43	49,2	43,8	50	**BI-826**
	44,04 x 3,53	45	51,2	44,8	51	**BI-224-827**
	46,04 x 3,53	46	52,2	46,8	53	**BI-828**
	47,22 x 3,53	48	54,2	47,8	54	**BI-225-829**
	49,2 x 3,53	49	55,2	49,8	56	**BI-830**
	50,39 x 3,53	51	57,2	51,8	58	**BI-226-831**
	52,4 x 3,53	52	58,2	53,8	60	**BI-832**
	53,57 x 3,53	54	60,2	54,8	61	**BI-227-833**
	55,56 x 3,53	56	62,2	55,8	62	**BI-834**
	56,74 x 3,53	57	63,2	57,8	64	**BI-228-835**
	58,74 x 3,53	59	65,2	58,8	65	**BI-836**
	59,92 x 3,53	60	66,2	60,8	67	**BI-229-837**
	61,9 x 3,53	62	68,2	62,8	69	**BI-838**
	63,09 x 3,53	64	70,2	63,8	70	**BI-230-839**
	65,1 x 3,53	65	71,2	65,8	72	**BI-840**
	66,27 x 3,53	67	73,2	66,8	73	**BI-231-841**
	68,26 x 3,53	68	74,2	68,8	75	**BI-842**
	69,44 x 3,53	70	76,2	70,8	77	**BI-232-843**
	71,44 x 3,53	72	78,2	71,8	78	**BI-844**
	72,62 x 3,53	73	79,2	73,8	80	**BI-233-845**
	74,6 x 3,53	75	81,2	74,8	81	**BI-846**
	75,79 x 3,53	76	82,2	76,8	83	**BI-234**
	78,97 x 3,53	79	85,2	79,8	86	**BI-235**
	82,14 x 3,53	82	88,2	82,8	89	**BI-236**
	85,32 x 3,53	85	91,2	85,8	92	**BI-237**
	88,49 x 3,53	89	95,2	88,8	95	**BI-238**
	91,67 x 3,53	92	98,2	92,8	99	**BI-239**
	94,84 x 3,53	95	101,2	95,8	102	**BI-240**
	98,02 x 3,53	98	104,2	98,8	105	**BI-241**
	101,19 x 3,53	101	107,2	101,8	108	**BI-242**
	104,37 x 3,53	105	111,2	104,8	111	**BI-243**
	107,54 x 3,53	108	114,2	107,8	114	**BI-244**
	110,72 x 3,53	111	117,2	111,8	118	**BI-245**
	113,89 x 3,53	114	120,2	114,8	121	**BI-246**
	117,07 x 3,53	117	123,2	117,8	124	**BI-247**
	120,24 x 3,53	120	126,2	120,8	127	**BI-248**
	123,42 x 3,53	123	129,2	123,8	130	**BI-249**
	126,59 x 3,53	127	133,2	126,8	133	**BI-250**
	129,77 x 3,53	130	136,2	129,8	136	**BI-251**
	132,94 x 3,53	133	139,2	133,8	140	**BI-252**
	136,12 x 3,53	136	142,2	136,8	143	**BI-253**

Endless TPE back-up rings

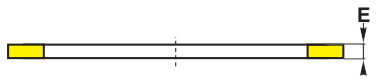

BI

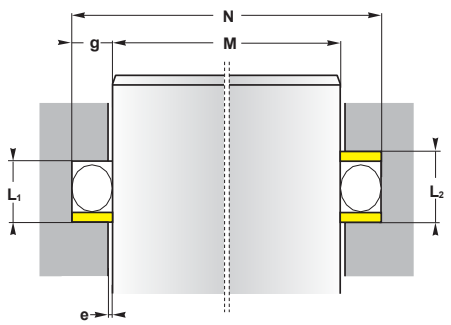

Internal housing

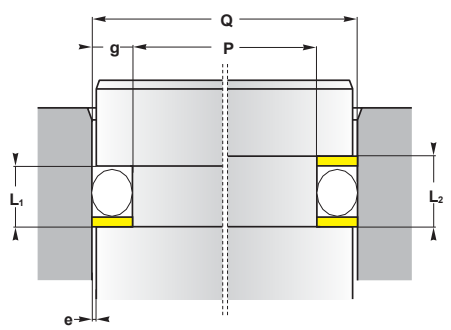

External housing

Pressure (MPa)	25	30	35	40	50
e max (mm)	0,25	0,2	0,15	0,1	0,05

d (O-ring)	g	L1	L2	E
1,78	1,55	3,8	5,2	1,4
2,62	2,25	5	6,4	1,4
3,53	3,1	6,2	7,6	1,4
5,34	4,7	8,8	10,5	1,7
7	6,1	12	14,5	2,5

BI back-up rings are used in conjunction with O-rings for both static and dynamic sealing applications. They prevent extrusion of the O-ring when it is subjected to high pressures, or when the extrusion gaps are excessive.

If pressure arises on only one side of the O-ring, it will suffice to fit one anti-extrusion ring on the side not exposed to pressure.

For double-acting applications, **two back-up rings** should be used, one on each side of the O-ring.

BI back-up rings are flat continuous anti-extrusion rings without a cut or a spiral shape that could cause system failure under extreme loads. They are made out of an elastic thermoplastic polyester resin which allows them to be stretched over pistons for easy installation and without any auxiliaries.

Operating conditions

Pressure	≤ 50 MPa
Temperature	-30°C to 110°C
Fluids	mineral oil, HFA, HFB

Materials

TPE	polyester 55 Sh D

Assembly

In one-piece housings

Advantages

Easy assembly

Endless for internal and external housings

Please contact us for applications approaching maximum values.

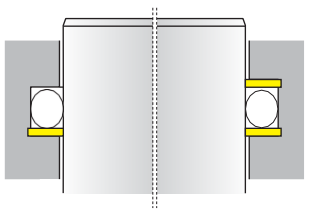

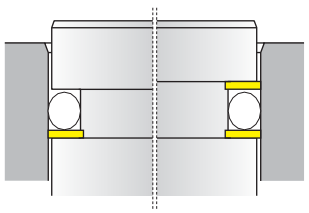

Advise : for static sealing, with machining of housings following the two drawings above, it is possible to use BI-back-up rings respecting the DIN-ISO norm (static sealing).

O-ring cross section	O-ring D x d	int. housing M	int. housing N	ext. housing P	ext. housing Q	Reference
3,53	139,29 x 3,53	140	146,2	139,8	146	**BI-254**
	142,47 x 3,53	143	149,2	142,8	149	**BI-255**
	148,82 x 3,53	149	155,2	148,8	155	**BI-257**
	151,99 x 3,53	152	158,2	152,8	159	**BI-258**
	202,79 x 3,53	203	209,2	203,8	210	**BI-266**
	221,84 x 3,53	222	228,2	221,8	228	**BI-269**
5,34	37,47 x 5,34	38	47,4	38,6	48	**BI-325**
	40,64 x 5,34	41	50,4	42,6	52	**BI-326**
	43,82 x 5,34	44	53,4	45,6	55	**BI-327**
	46,99 x 5,34	47	56,4	48,6	58	**BI-328**
	50,17 x 5,34	50	59,4	51,6	61	**BI-329**
	53,34 x 5,34	53	62,4	54,6	64	**BI-330**
	56,52 x 5,34	57	66,4	58,6	68	**BI-331**
	59,69 x 5,34	60	69,4	60,6	70	**BI-332**
	62,87 x 5,34	63	72,4	63,6	73	**BI-333**
	66,04 x 5,34	66	75,4	67,6	77	**BI-334**
	69,22 x 5,34	69	78,4	70,6	80	**BI-335**
	72,39 x 5,34	73	82,4	73,6	83	**BI-336**
	74,63 x 5,34	75	84,4	75,6	85	**BI-619**
	75,57 x 5,34	76	85,4	76,6	86	**BI-337**
	78,74 x 5,34	79	88,4	80,6	90	**BI-338-620**
	81,92 x 5,34	82	91,4	82,6	92	**BI-339**
	85,09 x 5,34	85	94,4	85,6	95	**BI-340**
	88,27 x 5,34	88	97,4	88,6	98	**BI-341**
	89,69 x 5,34	90	99,4	90,6	100	**BI-621**
	91,44 x 5,34	92	101,4	92,6	102	**BI-342**
	94,62 x 5,34	95	104,4	95,6	105	**BI-343**
	97,79 x 5,34	98	107,4	98,6	108	**BI-344**
	100,0 x 5,34	100	109,4	100,6	110	**BI-622**
	100,97 x 5,34	101	110,4	101,6	111	**BI-345**
	104,14 x 5,34	104	113,4	105,6	115	**BI-346**
	107,32 x 5,34	107	116,4	108,6	118	**BI-347**
	110,49 x 5,34	110	119,4	111,6	121	**BI-348-623**
	113,67 x 5,34	114	123,4	115,6	125	**BI-349**
	116,84 x 5,34	117	126,4	118,6	128	**BI-350-860**
	120,02 x 5,34	121	130,4	122,6	132	**BI-351-861**
	123,8 x 5,34	124	133,4	125,6	135	**BI-862**
	126,37 x 5,34	127	136,4	127,6	137	**BI-353-863**
	129,54 x 5,34	130	139,4	130,6	140	**BI-354-864**
	133,35 x 5,34	134	143,4	135,6	145	**BI-865**
	135,89 x 5,34	137	146,4	137,6	147	**BI-356-866**
	139,07 x 5,34	140	149,4	140,6	150	**BI-357-867**

Endless TPE back-up rings

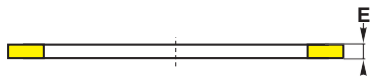

BI

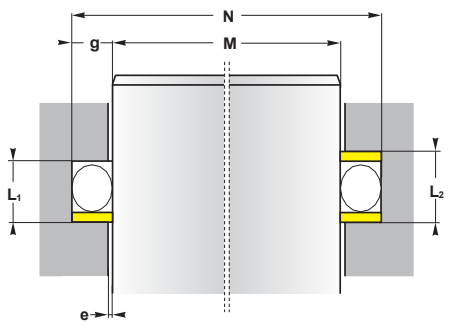

Internal housing

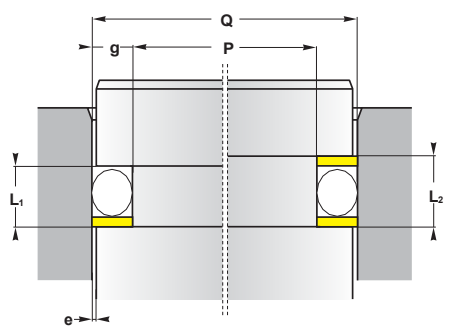

External housing

Pressure (MPa)	25	30	35	40	50
e max (mm)	0,25	0,2	0,15	0,1	0,05

d (O-ring)	g	L1	L2	E
1,78	1,55	3,8	5,2	1,4
2,62	2,25	5	6,4	1,4
3,53	3,1	6,2	7,6	1,4
5,34	4,7	8,8	10,5	1,7
7	6,1	12	14,5	2,5

BI back-up rings are used in conjunction with O-rings for both static and dynamic sealing applications. They prevent extrusion of the O-ring when it is subjected to high pressures, or when the extrusion gaps are excessive.

If pressure arises on only one side of the O-ring, it will suffice to fit one anti-extrusion ring on the side not exposed to pressure.

For double-acting applications, **two back-up rings** should be used, one on each side of the O-ring.

BI back-up rings are flat continuous anti-extrusion rings without a cut or a spiral shape that could cause system failure under extreme loads. They are made out of an elastic thermoplastic polyester resin which allows them to be stretched over pistons for easy installation and without any auxiliaries.

Operating conditions

Pressure	≤ 50 MPa
Temperature	-30°C to 110°C
Fluids	mineral oil, HFA, HFB

Materials

TPE	polyester 55 Sh D

Assembly

In one-piece housings

Advantages

Easy assembly

Endless for internal and external housings

Please contact us for applications approaching maximum values.

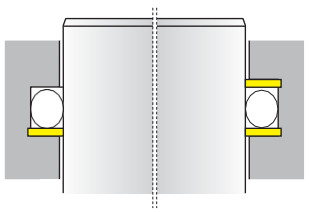

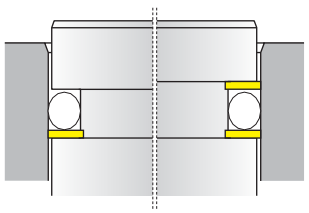

Advise : for static sealing, with machining of housings following the two drawings above, it is possible to use BI-back-up rings respecting the DIN-ISO norm (static sealing).

O-ring cross section	O-ring D x d	int. housing M	int. housing N	ext. housing P	ext. housing Q	Reference
5,34	142,24 x 5,34	143	152,4	143,6	153	**BI-358-868**
	148,59 x 5,34	150	159,4	150,6	160	**BI-360-870**
	151,77 x 5,34	152	161,4	153,6	163	**BI-361**
	158,12 x 5,34	158	167,4	159,6	169	**BI-362**
	164,47 x 5,34	165	174,4	165,6	175	**BI-363**
	170,82 x 5,34	171	180,4	172,6	182	**BI-364**
	177,17 x 5,34	178	187,4	178,6	188	**BI-365**
	189,87 x 5,34	190	199,4	190,6	200	**BI-367**
	196,22 x 5,34	196	205,4	197,6	207	**BI-368**
	208,92 x 5,34	209	218,4	210,6	220	**BI-370**
	221,62 x 5,34	222	231,4	222,6	232	**BI-372**
	227,97 x 5,34	228	237,4	229,6	239	**BI-373**
7	113,67 x 7	114	126,2	114,8	127	**BI-425**
(6,99)	116,84 x 7	117	129,2	117,8	130	**BI-426**
	123,2 x 7	123	135,2	124,8	137	**BI-428**
	126,37 x 7	126	138,2	127,8	140	**BI-429**
	132,72 x 7	133	145,2	133,8	146	**BI-431**
	135,89 x 7	136	148,2	137,8	150	**BI-432**
	139,07 x 7	139	151,2	140,8	153	**BI-433**
	145,42 x 7	145	157,2	147,8	160	**BI-435**
	155,6 x 7	156	168,2	157,8	170	**BI-872**
	166,7 x 7	167	179,2	167,8	180	**BI-628**
	181,0 x 7	180	192,2	182,8	195	**BI-880**
	183,52 x 7	184	196,2	184,8	197	**BI-442**
	189,87 x 7	190	202,2	190,8	203	**BI-443**
	193,7 x 7	194	206,2	194,8	207	**BI-884**
	196,22 x 7	196	208,2	197,8	210	**BI-444**
	208,92 x 7	210	222,2	209,8	222	**BI-674**
	215,27 x 7	215	227,2	217,8	230	**BI-446**
	227,97 x 7	230	242,2	229,8	242	**BI-447**
	234,32 x 7	235	247,2	237,8	250	**BI-678**
	272,4 x 7	273	285,2	273,8	286	**BI-684**