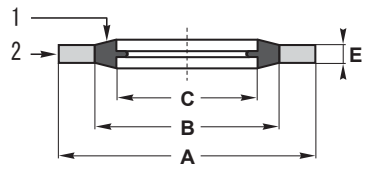

0BSC

0BSC-FPM

0BS9-NBR-SS

0BS9-FPM-SS

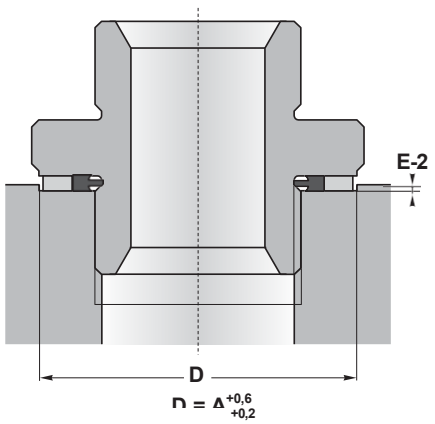

0BSC bonded seals are used for screws and connectors.

By tightening the screws the elastomer sealing lip is compressed, thereby producing the sealing effect on the surfaces to be sealed. It stops the medium from leaking to the outside, thus preventing loss of pressure. In addition, it provides **protection against dirt** from the outside.

The centering feature of the **0BSC** type ensures that the bonded seal is fixed in the correct position for mounting and when tightening the screws, the captive mounting is guaranteed.

Operating conditions

Pressure	contact us
Temperature	
NBR	-30 to 100°C
FPM	-20 to 200°C

Materials

① **08BSC**	NBR 70 Sh A
08BSC-FPM	FPM 70 Sh A
② **08BSC**	Cd-plated or passivated steel
08BSC-FPM	Cd-plated or passivated steel
08BSC-NBR-SS	stainless steel
08BSC-FPM-SS	stainless steel

Assembly

For connectors : see drawing on this page

Advantages

No sweating

Large range of elastomers and metals possible

Sealing for metric, Whitworth and BSP threads

Captive mounting

Please contact us for applications approaching maximum values.

A	B	C	E
+0,13 0	±0,13	±0,13	±0,15

0BSC = Self-centralising English range

BSP	Inch	A	B	C	E	Standard reference	Other references
	1-4	13,21	8	6,86	1,3	**0BSC-04**	
	5-16	13,34	9,53	8,31	1,3	**0BSC-06**	
	5-16	14,22	10,04	8,64	1,3	**0BSC-07**	
	0,4	18,36	12,45	11,26	2	**0BSC-08**	
	7-16	19,05	13,08	11,69	2	**0BSC-09**	
	9-16	22,23	16,39	14,86	2	**0BSC-10**	
	5-8	25,4	18,75	16,51	2	**0BSC-11**	
	11-16	25,4	19,69	18,16	2,5	**0BSC-12**	
	15-16	33,27	26,04	24,26	2,5	**0BSC-13**	
	1.3-8	44,45	38,99	35,94	3,4	**0BSC-16**	
	1.1-2	47,75	42,04	38,96	3,4	**0BSC-17**	
	1.3-4	57,15	48,39	45,34	3,4	**0BSC-18**	
1-8	**3-8**	15,88	11,84	10,37	2	**0BSC-20**	**FPM-SS,-NBR-SS**
1-4	**1-2**	20,57	15,21	13,74	2	**0BSC-21**	**NBR-SS,-FPM,-FPM-SS**
3-8		23,8	18,75	17,28	2	**0BSC-23**	**NBR-SS,-FPM,-FPM-SS**
	3-4	26,92	21,21	19,69	2,5	**0BSC-24**	
1-2	**13-16**	28,58	23,01	21,54	2,5	**0BSC-25**	**NBR-SS,-FPM,-FPM-SS**
5-8	**7-8**	31,75	24,97	23,49	2,5	**0BSC-26**	**NBR-SS,-FPM-SS**
3-4	**1**	34,93	28,53	27,05	2,5	**0BSC-27**	**NBR-SS,-FPM,-FPM-SS**
7-8	**1-3-16**	38,1	32,29	30,81	2,5	**0BSC-29**	**FPM**
1	**1-5-16**	42,8	36,88	33,89	3,2	**0BSC-30**	**FPM**
1-1-4	**1-5-8**	52,38	45,93	42,93	3,2	**0BSC-32**	**FPM**
1-1-2	**1-7-8**	58,6	51,39	48,44	3,2	**0BSC-33**	
2		73,03	63,63	60,58	3,2	**0BSC-36**	
2-1-2		90,3	79,38	76,08	3,25	**0BSC-39**	

Self-centralising bonded seals

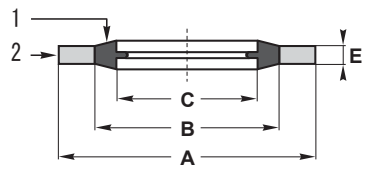

0BSC

0BSC-FPM

0BS9-NBR-SS

0BS9-FPM-SS

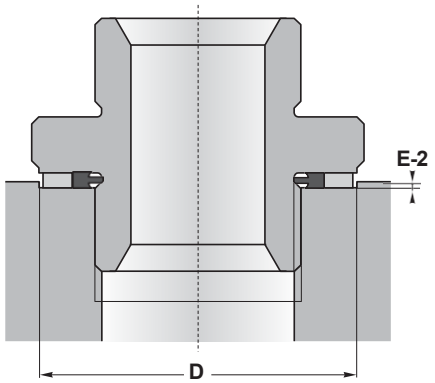

$D = A^{+0,6}_{+0,2}$

0BSC bonded seals are used for screws and connectors.

By tightening the screws the elastomer sealing lip is compressed, thereby producing the sealing effect on the surfaces to be sealed. It stops the medium from leaking to the outside, thus preventing loss of pressure. In addition, it provides **protection against dirt** from the outside.

The centering feature of the **0BSC** type ensures that the bonded seal is fixed in the correct position for mounting and when tightening the screws, the captive mounting is guaranteed.

Operating conditions

Pressure	contact us
Temperature	
NBR	-30 to 100°C
FPM	-20 to 200°C

Materials

① **08BSC**	NBR 70 Sh A
08BSC-FPM	FPM 70 Sh A
② **08BSC**	Cd-plated or passivated steel
08BSC-FPM	Cd-plated or passivated steel
08BSC-NBR-SS	stainless steel
08BSC-FPM-SS	stainless steel

Assembly

For connectors: see drawing on this page

Advantages

No sweating

Large range of elastomers and metals possible

Sealing for metric, Whitworth and BSP threads

Captive mounting

Please contact us for applications approaching maximum values.

A	B	C	E
+0,13 0	±0,13	±0,13	±0,15

SEALS 24 SEALS + COMPONENTS

0BSC-2 = Self-centralising German range

metric	A	B	C	E	Reference
M4	7	5,4	4,5	1	**0BSC-202**
M5	9	6,8	5,7	1	**0BSC-203**
	10	7,4	5,7	1	**0BSC-204**
M6	10	8	6,7	1	**0BSC-206**
	10	8	6,7	1	**0BSC-206-FPM-SS**
	11	8,2	6,7	1	**0BSC-207**
	11	8,2	6,7	1	**0BSC-207-FPM-SS**
	11	8,2	6,7	1	**0BSC-207-NBR-SS**
M8	13	10	8,7	1	**0BSC-212**
	14	10,4	8,7	1	**0BSC-213**
	14	10,4	8,7	1	**0BSC-213-FPM-SS**
	14	10,4	8,7	1	**0BSC-213-NBR-SS**
M8,5	13,3	10,5	9,3	1	**0BSC-215**
M10	16	12	10,35	2	**0BSC-216**
	16	12,4	10,7	1,5	**0BSC-217**
	16	12,4	10,7	1,5	**0BSC-217-FPM-SS**
	18	12,4	10,7	1,5	**0BSC-218**
M11	19,1	13,5	11,8	1,5	**0BSC-221**
M12	18	14,4	12,7	1,5	**0BSC-222**
	18	14,4	12,7	1,5	**0BSC-222-FPM-SS**
	18	14,4	12,7	1,5	**0BSC-222-NBR-SS**
M13	22	15,4	13,7	1,5	**0BSC-225**
M13,5	18,7	15,7	14	1,5	**0BSC-226**

metric	A	B	C	E	Reference
M14	22	16,4	14,7	1,5	**0BSC-227**
	22	16,4	14,7	1,5	**0BSC-227-FPM-SS**
M16	24	18,4	16,7	1,5	**0BSC-229**
	24	18,4	16,7	1,5	**0BSC-229-FPM-SS**
	24	18,4	16,7	1,5	**0BSC-229-NBR-SS**
M17	24	19,2	17,4	1,5	**0BSC-230**
M18	26	20,4	18,7	1,5	**0BSC-232**
	26	20,4	18,7	1,5	**0BSC-232-FPM-SS**
	26	20,4	18,7	1,5	**0BSC-232-NBR-SS**
M20	28	22,5	20,7	1,5	**0BSC-233**
	28	22,5	20,7	1,5	**0BSC-233-FPM-SS**
	28	22,5	20,7	1,5	**0BSC-233-NBR-SS**
M22	30	24,4	22,7	2	**0BSC-236**
	30	24,4	22,7	2	**0BSC-236-FPM-SS**
	30	24,4	22,7	2	**0BSC-236-NBR-SS**
M24	32	26,4	24,7	2	**0BSC-238**
	32	26,4	24,7	2	**0BSC-238-FPM-SS**
M26	35	28,4	26,7	2	**0BSC-239**
M27	36	29	27,7	2	**0BSC-240**
M30	39	32,8	30,7	2	**0BSC-242**
M33	42	35,8	33,7	2	**0BSC-243**
M36	46	38,8	36,7	2	**0BSC-245**

0BSC-3 = Self-centralising French range

metric	A	B	C	E	Reference
M5	10	7	5,6	1	**0BSC-303**
M6	11	8	6,6	1	**0BSC-304**
M8	13	10	8,6	1	**0BSC-307**
M10	17	12,1	10,7	1,5	**0BSC-310**
M12	19	14,1	12,7	1,5	**0BSC-313**
M14	21	16,1	14,7	1,5	**0BSC-316**

metric	A	B	C	E	Reference
M16	23	18,1	16,7	1,5	**0BSC-317**
M20	29	22,4	20,7	2	**0BSC-321**
M22	31	24,4	22,7	2	**0BSC-324**
M24	33	26,4	24,7	2	**0BSC-326**
M42	54	45,6	43	2,5	**0BSC-335**